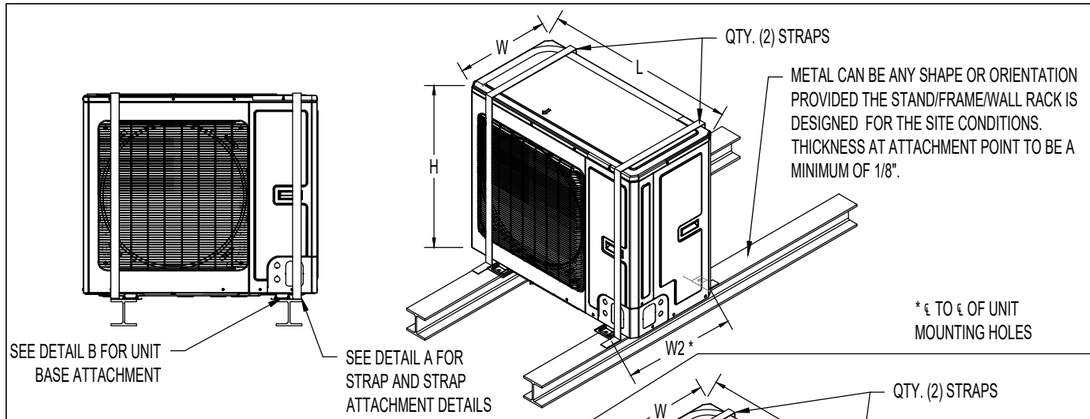

EQUIPMENT ON METAL ISOMETRIC VIEW

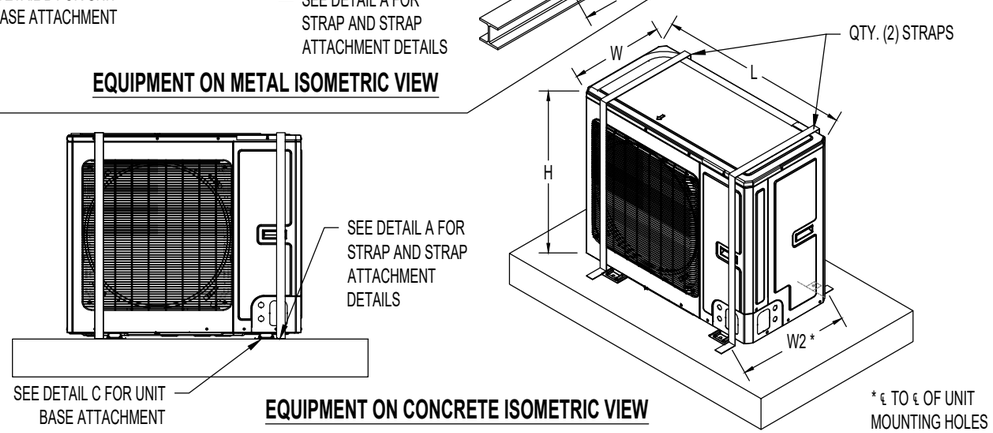

EQUIPMENT ON CONCRETE ISOMETRIC VIEW

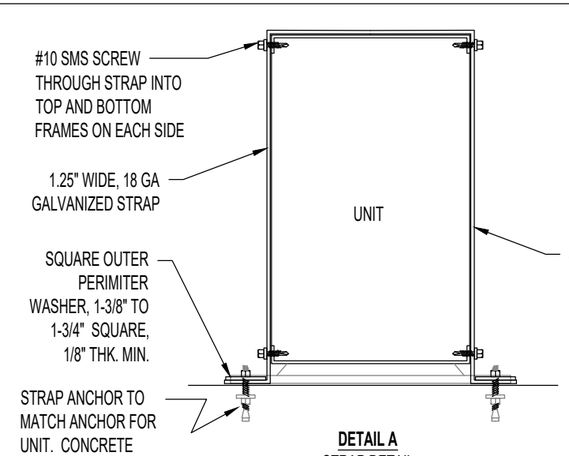

DETAIL A
STRAP DETAIL

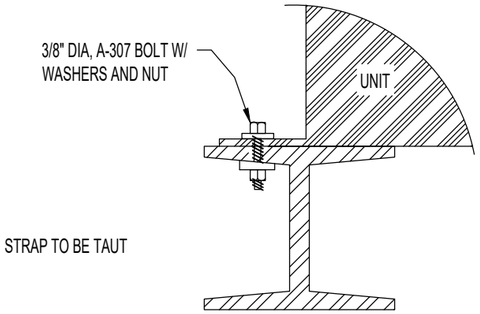

DETAIL B
CROSS SECTION OF ATTACHMENTS TO METAL

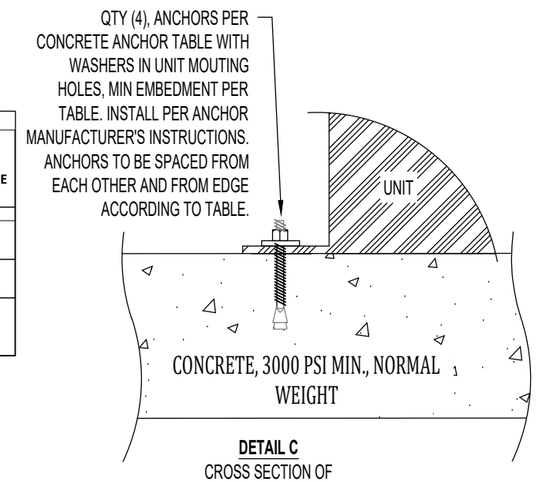

DETAIL C
CROSS SECTION OF ATTACHMENTS TO CONCRETE

CONCRETE ANCHOR TABLE:

ANCHOR SPECS		MIN. REQ'D SPACING BETWEEN CONCRETE	MIN. REQ'D DISTANCE TO CONCRETE EDGE FOR ANCHOR
3/8" DIA. SIMPSON WEDGE-ALL ANCHOR, WITH MIN EMBED OF 1.75" IN 3000 PSI MIN. CONCRETE		2.5"	3.75"
5/16" DIA. TAPCON+ ANCHOR, WITH MIN EMBED OF 1.75" IN 3000 PSI MIN. CONCRETE		3"	3"
1/4" DIA. TAPCON ANCHOR, WITH MIN EMBED OF 1.75" IN 3000 PSI MIN. CONCRETE, ****FOR GROUND LEVEL MOUNT ONLY****		4"	3"

WIND LOAD CALCULATIONS PER APPLICABLE SECTIONS OF:
FBC CHAPTERS 15&16. 2020, 7TH ED.
ASCE7 CHAPTERS 26&29, 2016

DESIGN CONDITIONS:
1. EQUIPMENT DEAD LOAD: SEE CALCULATION
2. LOCATION: ROOF, 60' MAXIMUM ABOVE GRADE
3. WIND DESIGN CRITERIA:
   3.1. Vult: 195 mph
   3.2. Vasd: 151 mph
   3.3. RISK CAT: IV
   3.4. WIND EXPOSURE: D, HVHZ
4. USE ASD LOAD COMBINATIONS FOR WIND, FBC SECTION 1605.3:
   4.1. 0.6D+(0.6W), EQ. 16-15, FOR UPLIFT (F_h AND F_v)
   4.2. D+(0.6W), EQ. 16-12, FOR DOWNWARD FORCES

Wind Direction A, Normal to Long Side of Unit

H	31.2	in
L	36.2	in
W	14.6	in
W_2	15.8	in
Weight	125	lbs
V_ult	195	mph
V_ASD	151.0	mph
Risk Category	IV	
Exposure	D	
K_z	1.33	Table 29.3-1 (65 ft elev.)
K_d	0.85	ASCE7, table 26.6-1
K_zt	1	
q_z=0.00256*K_z*K_zt*K_d*V^2 (lb/sq ft)		
q_z=	110.0	psf

F_h=q_h*(GC_r)*A_f		
GC_r =	1.9	Eq 29.5-2
A_f unit	7.8	SQ.FT
A_f hoods-accessories	0.0	SQ.FT
A_f total	7.8	SQ.FT
F_h=q_h*(GC_r)	209.1	lb/sq ft
F min (lb/sq ft)	16	ASCE7, section 29.8
F_h=q_h*(GC_r)*A_f =	1640	lb
F_v=q_h*(GC_r)*A_r		
GC_r =	1.5	Eq 29.5-3
A_f unit	3.7	SQ.FT
A_f hoods-accessories	0.0	SQ.FT
A_f	3.7	SQ.FT
F_v=q_h*(GC_r)	165.1	lb/sq ft
F min (lb/sq ft)	16	ASCE7, section 29.8
F_v=q_h*(GC_r)*A_f =	605.9	lb

Calculation Results

Totals at Base - Bolt:

# anchors on upwind side	2
# anchors per short side	0

0.6W+0.6D
557.9 LB uplift/anchor

Shear at base of equipment

F_h total (equipment)*0.6	984 LBS
# anchors	4

246.0 LB shear/anchor

3/8" rod/bolt assembly
A307 steel

ANCHOR ALLOWABLE TENSION	2490.0
ANCHOR ALLOWABLE SHEAR	1330.0

Anchor installed horizontally (uplift loads hardware in shear)
Anchor Combined loading value
0.19 must be less than or = to 1
Anchor is OK

Totals at Base - Concrete Anchor:

# anchors on upwind side	4
# anchors per short side	0

0.6W+0.6D
279 LB uplift/anchor

Shear at base

# anchors	4

246.0 LB shear/anchor

Wedge Anchor, 3000psi normal weight concre
3/8" anchors, 1.75" embed

ANCHOR ALLOWABLE TENSION	555 LBS
ANCHOR ALLOWABLE SHEAR	570 LBS

Anchor installed vertically (uplift loads hardware in tension)
Anchor Combined loading value
0.56 must be less than or = to 1
Anchor is OK

SCOPE:
PRODUCT EVALUATION AND TIE-DOWN DETAIL FOR CONDENSING UNITS TO METAL (ALUMINUM OR STEEL) AND CONCRETE SURFACES. EVALUATION AND TIE-DOWNS INVESTIGATE WIND SHEAR AND OVERTURNING MOMENT. UNIT INTEGRITY IS ADDRESSED WITH THE STRAPS AND PREVENTS PANEL SEPARATION. CUs ARE MADE BY GREE, MODEL NUMBERS:
3VIR09HP115V1AO, 3VIR12HP115V1AO, 3VIR09HP230V1AO, 3VIR12HP230V1AO, 3VIR18HP230V1AO, 3VIR24HP230V1AO
3VIR09HP115V1BO, 3VIR12HP115V1BO, 3VIR09HP230V1BO, 3VIR12HP230V1BO, 3VIR18HP230V1BO, 3VIR24HP230V1BO

GENERAL NOTES:
1. INTEGRITY OF METAL (STEEL OR ALUMINUM) OR CONCRETE STRUCTURE SHALL BE RATED FOR THE LOADS OF THE UNITS. THIS CAN BE ACHIEVED WITH STAND/FRAME/WALL RACK/PAD ETC. WITH NOA, FLORIDA PRODUCT APPROVAL, EOR SPECIFICATION, OR OTHER AHJ APPROVED METHOD.
2. ANCHORS, BOLTS, SCREWS, AND RODS TO HAVE CORROSION RESISTANT COATING SUITABLE FOR THE ENVIRONMENT. COASTAL INSTALLATIONS REQUIRE HOT DIP GALVANIZED OR STAINLESS STEEL.
3. IT IS OWNER'S RESPONSIBILITY TO ENSURE THAT ALL MANUFACTURER'S SCREWS, PANEL SCREWS,STRAP SCREWS, AND ANCHORS ARE IN PLACE AS PART OF THEIR PERIODIC MAINTENANCE AND HURRICANE PREPARATION PLANS.
4. IT IS OWNER'S RESPONSIBILITY TO ENSURE THAT ALL ATTACHMENT LOCATIONS AND FASTENERS ARE MAINTAINED AND DO NOT CORRODE OVER TIME

SRM MECHANICAL DESIGN

ENGINEER:
Samuel Martin, PE
Digitally signed by Samuel Martin, PE
Date: 2022.11.22 11:41:00 -05'00'

Samuel Martin, PE, State of Florida, Professional Engineer, License No. 69293.

This item has been digitally signed by Samuel Martin, PE on date as shown on timestamp above.

Printed copies of this document are not considered signed and sealed and the signature must be verified on any electronic copies.

Samuel Martin, P.E.
FL PE# 69293

SRM Mechanical Design, Inc.
FL CA# 32380
20197 NE 16th PL
Miami, FL 33179

tel: 305-318-5883
e-mail: sales@srmmech.com

REVISION HISTORY:

REV	DATE	DESCRIPTION
-	-	-

USE DISCLAIMER:
COPYRIGHT RESERVED
THE COPYRIGHTS TO ALL DESIGNS AND DRAWINGS ARE THE PROPERTY OF SRM MECHANICAL DESIGN. REPRODUCTION OR USE FOR ANY PURPOSE OTHER THAN THAT AUTHORIZED BY SRM MECHANICAL DESIGN IS FORBIDDEN.

PROJECT NAME:
GREE VIREO-GEN3 3VIR CONDENSING UNIT PRODUCT EVALUATIONS-3VIR09-24HP...AO 3VIR09-24HP...BO

DRAWING TITLE
PRODUCT EVALUATION AND TIE-DOWN DETAILS

DATE	9/16/2022		
BY	SRM	CHK'D	SRM
DRAWING SCALE	NTS		
DRAWING NUMBER	22007-1	DWG SIZE B	REVISION 0